1 Allée des Bouleaux -F-95110 SANNOIS
+33 (0)1 39 98 55 00
info@restagraf.com

PAKKING VOOR OLIEAFLAATPLUG Ø 22,2 X 28,2 X 3 mm RUBBEREN O-RING

Item code	Number of References	Number of pieces	Conditioning
227342	1	3	
7342	1	10	

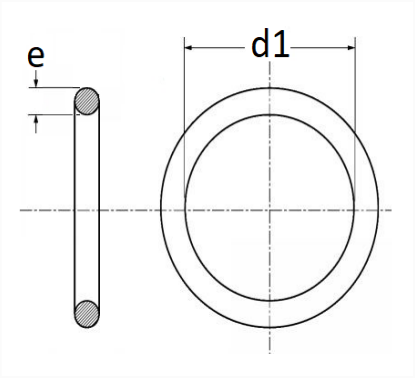

Technical informations	
d1	22.2 mm
e	3 mm

Materials
FLUOROCARBON RUBBER BASIS