1 Allée des Bouleaux -F-95110 SANNOIS
+33 (0)1 39 98 55 00
info@restagraf.com

SELBSTSPERRENDE SECHSKANTMUTTER MIT NYLONRING 8 M10-1.50 DIN 982

Item code	Number of References	Number of pieces	Conditioning
830	1	15	BEUTEL
40424	1	100	BEHÄLTER

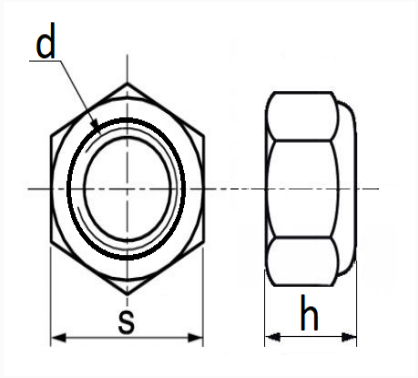

Technical informations	
s	17 mm
h	11.9 mm
d	M10 x 1.50

Materials
STAHL 8

Manufacturer correspondence*	
PEUGEOT / CITROËN	362230

* Non contractual information given as indication