1 Allée des Bouleaux -F-95110 SANNOIS
+33 (0)1 39 98 55 00
info@restagraf.com

GRADE 8 HEXAGON NUT M5-0.80 DIN 934

Item code	Number of References	Number of pieces	Conditioning
811	1	110	BAG
40401	1	200	BOX

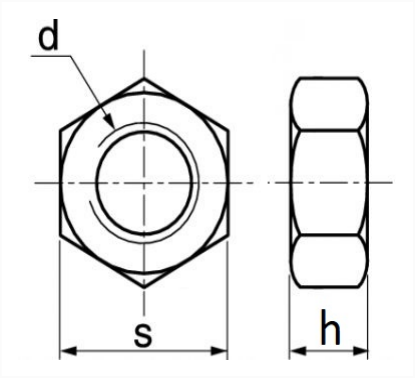

Technical informations	
s	8 mm
h	4 mm
d	M5 x 0.80

Materials
CLASS 8 STEEL

Manufacturer correspondence*			
PEUGEOT / CITROËN	693308	RENAULT	7903032006

* Non contractual information given as indication