1 Allée des Bouleaux -F-95110 SANNOIS
+33 (0)1 39 98 55 00
info@restagraf.com

GRADE 8.8 ZINC PLATED HEXAGON HEAD SCREW M7-1.00 X 20 mm DIN 933

Item code	Number of References	Number of pieces	Conditioning
806	1	30	BAG
40117	1	100	TRUCK BOX

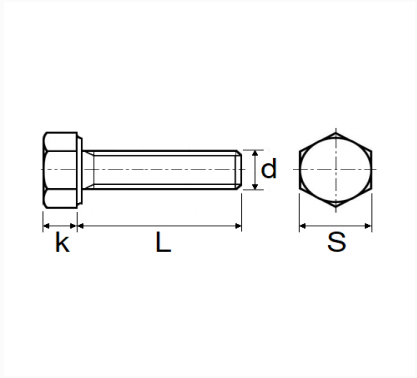

Technical informations	
s	11 mm
k	5 mm
L	20 mm
d	M7 x 1.00

Materials
CLASS 8.8 STEEL

Manufacturer correspondence*			
CITROËN	75516412	PEUGEOT / CITROËN	691536

Manufacturer correspondence*	
RENAULT	7703001236

* Non contractual information given as indication