1 Allée des Bouleaux -F-95110 SANNOIS
+33 (0)1 39 98 55 00
info@restagraf.com

DRAIN PLUG AND SEALING RING M14-1,5 X 13 mm

Item code	Number of References	Number of pieces	Conditioning
221469	2	2	BLISTER

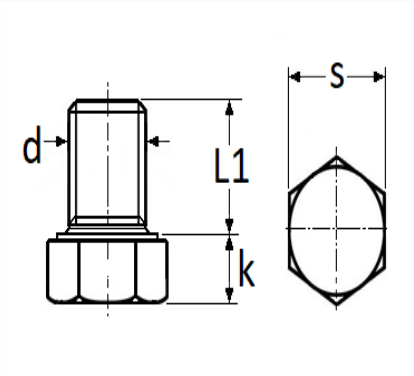

Technical informations	
s	19 mm
k	7.6 mm
L1	13 mm
d	M14 x 1.50

Materials
STEEL

Manufacturer correspondence*			
ALTERNATIVE TO CHEVROLET	9275631	ALTERNATIVE TO CHEVROLET	94501841

Manufacturer correspondence*			
ALTERNATIVE TO DAEWOO	9275631	ALTERNATIVE TO DAEWOO	94501841
ALTERNATIVE TO HONDA	90013PLZD00	ALTERNATIVE TO MAZDA	Y70110404
ALTERNATIVE TO OPEL	652475	ALTERNATIVE TO OPEL	6524910
ALTERNATIVE TO OPEL	652492	ALTERNATIVE TO OPEL	90409376
ALTERNATIVE TO OPEL	9275631	ALTERNATIVE TO OPEL	94027565
ALTERNATIVE TO SAAB	4502142		

* Non contractual information given as indication