1 Allée des Bouleaux -F-95110 SANNOIS
+33 (0)1 39 98 55 00
info@restagraf.com

SIMPLE CRIMP MALE INSULATED FLAT TERMINAL 6,35 x 0,8 mm (1 → 2,5 mm²)

Item code	Number of References	Number of pieces	Conditioning
6618	1	13	BAG
306618	1	100	BOX

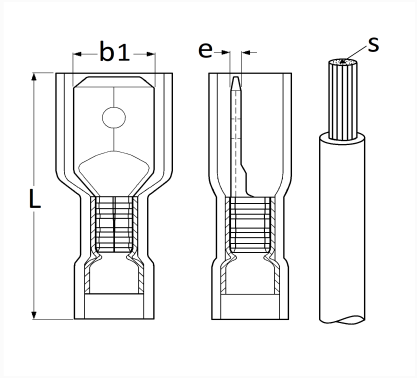

Technical informations	
L	23.3 mm
b2	6.35 mm
e	0.8 mm
s	1 → 2.5 mm²