1 Allée des Bouleaux -F-95110 SANNOIS
+33 (0)1 39 98 55 00
info@restagraf.com

METALLKÄFIGMUTTER M10-1,50 FÜR ANHÄNGERKUPPLUNG

Item code	Number of References	Number of pieces	Conditioning
221399	1	2	BLISTER
1399	1	4	BEUTEL

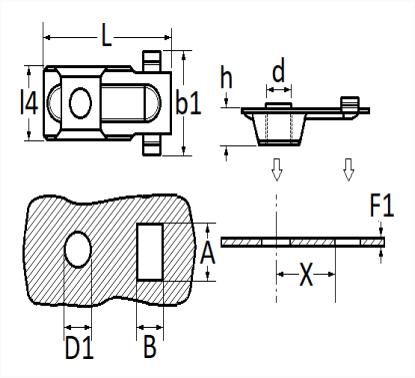

Technical informations	
L	50 mm
b1	27.3 mm
l4	19.6 mm
h	10.4 mm
d	M10 x 1.50
D1	12.3 mm
B	13 mm
A	20.2 mm
F1	1.5 → 1.75 mm
X	18.45 mm

Materials
STAHL