1 Allée des Bouleaux -F-95110 SANNOIS
+33 (0)1 39 98 55 00
info@restagraf.com

PLASTIC CABLE TIE 270 X 4,6 mm

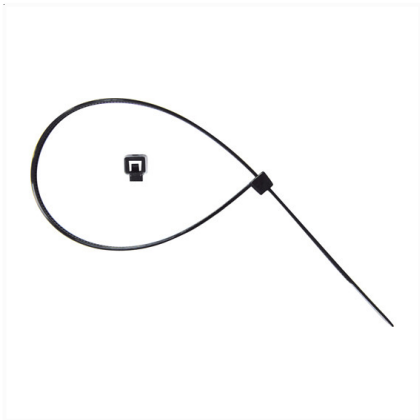

Item code	Number of References	Number of pieces	Conditioning
200599	1	40	TUBE
599	1	40	BAG
2048	1	200	BAG
220599	1	10	BLISTER

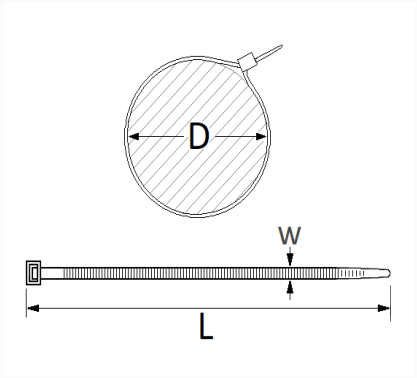

Technical informations	
L	270 mm
W	4.6 mm
D	5 → 73 mm

Materials
POLYAMIDE 6

Manufacturer correspondence*			
OPEL (GM) Catalog number	1288900	OPEL Part number	90039907

Manufacturer correspondence*			
PEUGEOT / CITROËN	698028	PEUGEOT / CITROËN	698046
RENAULT	7703085037		

* Non contractual information given as indication