1 Allée des Bouleaux -F-95110 SANNOIS
+33 (0)1 39 98 55 00
info@restagraf.com

KABELBINDER 180 X 3,6 mm

Item code	Number of References	Number of pieces	Conditioning
200598	1	50	ROHR
598	1	50	BEUTEL
2047	1	300	BEUTEL
220598	1	20	BLISTER

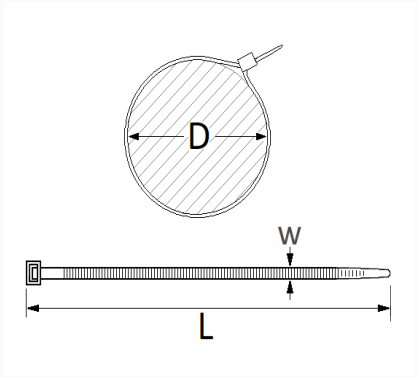

Technical informations	
L	180 mm
W	3.6 mm
D	1.5 → 49 mm

Materials
POLYAMID 66

Manufacturer correspondence*			
PEUGEOT	6999X9	PEUGEOT / CITROËN	6999X5

* Non contractual information given as indication