1 Allée des Bouleaux -F-95110 SANNOIS
+33 (0)1 39 98 55 00
info@restagraf.com

GRADE 8 SELF LOCKING NUT WITH NYLON INSERT M5-0.80 DIN 982

Item code	Number of References	Number of pieces	Conditioning
794	1	35	BAG
40420	1	200	BOX

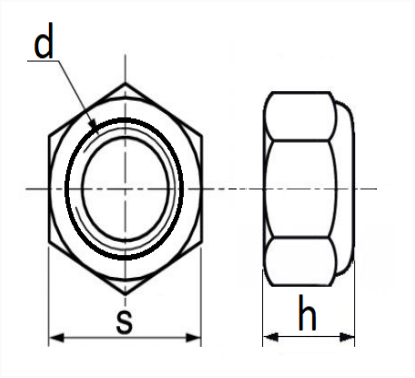

Technical informations	
s	8 mm
h	6.3 mm
d	M5 x 0.80

Materials
CLASS 8 STEEL

Manufacturer correspondence*	
RENAULT	7703034007

* Non contractual information given as indication