1 Allée des Bouleaux -F-95110 SANNOIS
+33 (0)1 39 98 55 00
info@restagraf.com

COIL OF 50 METERS ELECTRIC WIRE 2 mm² BROWN

Item code	Number of References	Number of pieces	Conditioning
16227	1	1	COIL

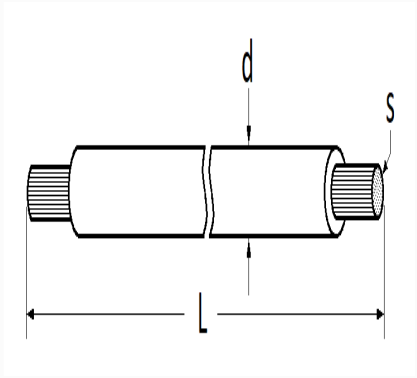

Technical informations	
L	50 m
d	2.60 mm
s	2 mm²

Materials
COPPER