1 Allée des Bouleaux -F-95110 SANNOIS
+33 (0)1 39 98 55 00
info@restagraf.com

MOULDING CLIP FENDER FLARES

Item code	Number of References	Number of pieces	Conditioning
130135	1	10	BAG

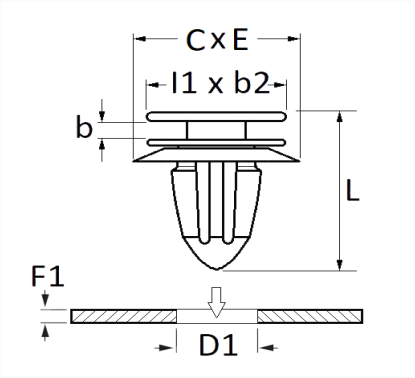

Technical informations	
I1	26 mm
b2	16 mm
b	2.75 mm
L	22 mm
C	20 mm
E	14 mm
D1	9 mm
F1	0.8 mm

Materials
POLYACETAL COPOLYMER

Manufacturer correspondence*			
CITROËN	YQ00109680	OPEL (GM) Catalog number	2073253

Manufacturer correspondence*			
OPEL (Stellantis)	YQ00109680	OPEL Part number	11588818

* Non contractual information given as indication