Restagraf
1 Allée des Bouleaux -F-95110 SANNOIS
+33 (0)1 39 98 55 00
info@restagraf.com

PANEELBEVESTIGINGSKLEM Ø 8,5 mm PORTIERBEKLEDING



Item code	Number of References	Number of pieces	Conditioning
42652	1	100	
130093	1	12	

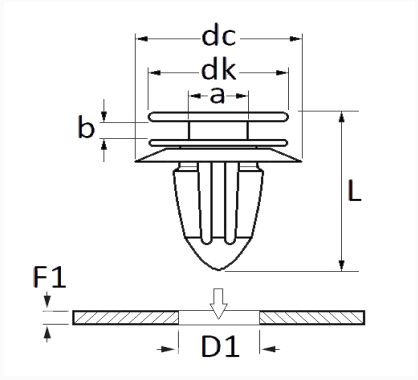

Technical informations	
dk	13 mm
dc	18 mm
b	2.6 mm
a	5.6 mm
L	19.9 mm
D1	8.5 mm
F1	0.7 → 1.6 mm

Materials
POLYACETAAL

Manufacturer correspondence*			
JAGUAR	T4N9812	JAGUAR	W780624SJ00

Manufacturer correspondence*			
LAND ROVER	LR090382	LAND ROVER	W780624SJ00
MITSUBISHI	MU000571	PEUGEOT / CITROËN	6822RH
PEUGEOT / CITROËN	6823HT	SUZUKI	0940910318
SUZUKI	0940910318000	TOYOTA	9046709206
TOYOTA	90467A0005	TOYOTA	90467T0019
TOYOTA	90467T0019A	TOYOTA	90467W0010

* Non contractual information given as indication