1 Allée des Bouleaux -F-95110 SANNOIS
+33 (0)1 39 98 55 00
info@restagraf.com

PLASTIC RIVET Ø 6 → 6,5 mm BUMPER

Item code	Number of References	Number of pieces	Conditioning
42639	1	100	BOX
10376	1	10	BAG

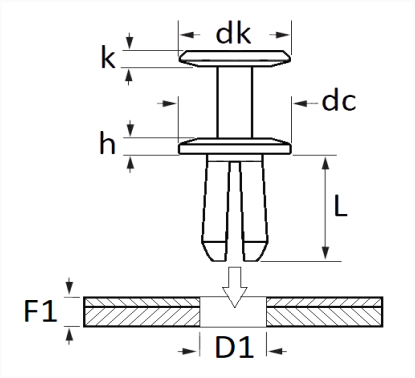

Technical informations	
dk	8 mm
k	1.4 mm
dc	15 mm
h	2 mm
L	15 mm
D1	6 → 6.5 mm
F1	2 → 10 mm

Materials
POLYAMIDE 66

Manufacturer correspondence*			
B.M.W	51111908077	LAND ROVER	EYQ100120

Manufacturer correspondence*			
LAND ROVER	UH12844072DA	MERCEDES-BENZ	A0009905492
SEAT	N90359101	SKODA	N90359101
VOLKSWAGEN	2E0868307C	VOLKSWAGEN	N90359101

* Non contractual information given as indication