Restagraf
1 Allée des Bouleaux -F-95110 SANNOIS
+33 (0)1 39 98 55 00
info@restagraf.com

DRAIN PLUG GASKET Ø 18,2 X 23,9 X 2 mm COPPER RING



Item code	Number of References	Number of pieces	Conditioning
40852	1	100	BOX
7373	1	10	BAG
227373	1	4	BLISTER

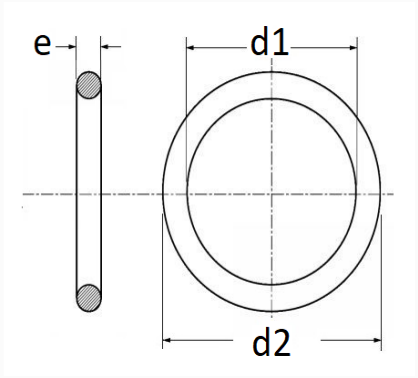

Technical informations	
d1	18.2 mm
d2	23.9 mm
e	2 mm

Materials
COPPER

Manufacturer correspondence*			
PEUGEOT / CITROËN	031326	RENAULT	7703062063

Manufacturer correspondence*	
RENAULT SAMSUNG MOTORS	0321825

* Non contractual information given as indication