1 Allée des Bouleaux -F-95110 SANNOIS
+33 (0)1 39 98 55 00
info@restagraf.com

GRADE 8 SELF LOCKING NUT WITH NYLON INSERT M12-1.25 DIN 985

Item code	Number of References	Number of pieces	Conditioning
40442	1	50	BOX

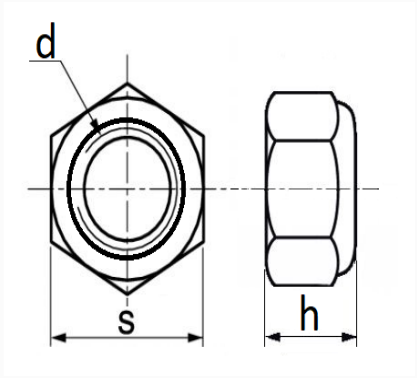

Technical informations	
s	18 mm
h	12 mm
d	M12 x 1.25

Materials
CLASS 8 STEEL