1 Allée des Bouleaux -F-95110 SANNOIS
+33 (0)1 39 98 55 00
info@restagraf.com

GRADE 8 SELF LOCKING NUT WITH NYLON INSERT M10-1.25 DIN 985

Item code	Number of References	Number of pieces	Conditioning
40441	1	100	BOX

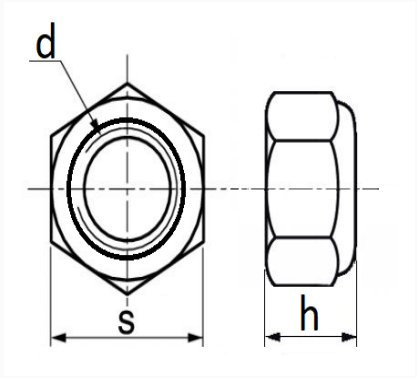

Technical informations	
s	17 mm
h	10 mm
d	M10 x 1.25

Materials
CLASS 8 STEEL