1 Allée des Bouleaux -F-95110 SANNOIS
+33 (0)1 39 98 55 00
info@restagraf.com

SELBSTSPERRENDE SECHSKANTMUTTER MIT NYLONRING 8 M12-1.75 DIN 982

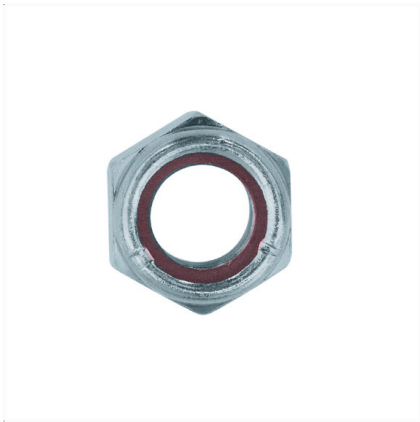

Item code	Number of References	Number of pieces	Conditioning
40425	1	50	BEHÄLTER
831	1	10	BEUTEL

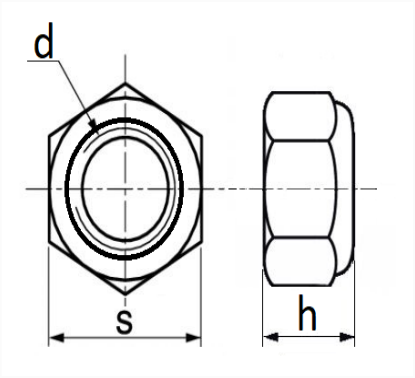

Technical informations	
s	18 mm
h	14.9 mm
d	M12 x 1.75

Materials
STAHL 8

Manufacturer correspondence*			
PEUGEOT / CITROËN	693987	RENAULT	7703034110

* Non contractual information given as indication