1 Allée des Bouleaux -F-95110 SANNOIS
+33 (0)1 39 98 55 00
info@restagraf.com

CONTACTBORGRING Ø 6 X 18 mm NF E25-511

Item code	Number of References	Number of pieces	Conditioning
40356	1	200	
862	1	45	

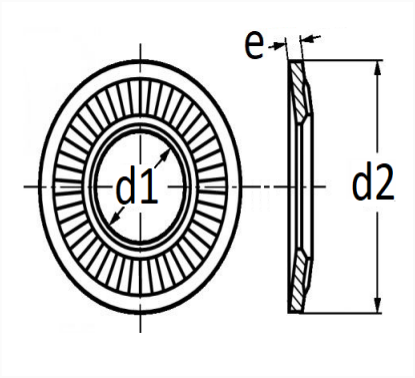

Technical informations	
d1	6.1 mm
d2	18 mm
e	1.4 mm

Materials
STAAL XC68

Manufacturer correspondence*	
PEUGEOT / CITROËN	696290

* Non contractual information given as indication