1 Allée des Bouleaux -F-95110 SANNOIS
+33 (0)1 39 98 55 00
info@restagraf.com

PLUG BUTTON Ø 25 mm



Item code	Number of References	Number of pieces	Conditioning
743	1	15	BAG

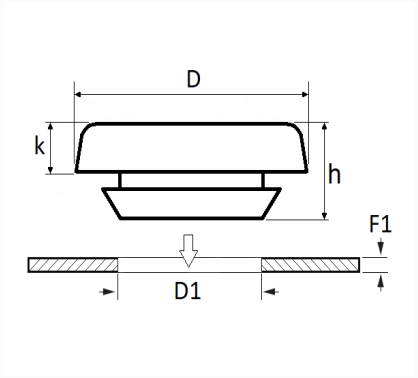

Technical informations	
D	31.6 mm
k	3 mm
h	7 mm
D1	25 mm
F1	0.5 → 1.5 mm

Materials
LOW DENSITY POLYETHYLENE

Manufacturer correspondence*	
RENAULT	7703074049

* Non contractual information given as indication