Restagraf
1 Allée des Bouleaux -F-95110 SANNOIS
+33 (0)1 39 98 55 00
info@restagraf.com

PLUG BUTTON Ø 17,5→ 18,2 mm



Item code	Number of References	Number of pieces	Conditioning
741	1	25	BAG

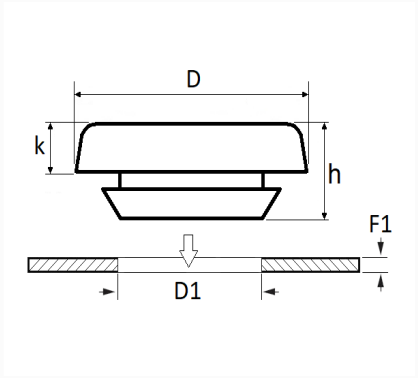

Technical informations	
D	29 mm
k	4 mm
h	9 mm
D1	18 mm
F1	0.5 → 2.5 mm

Materials
LOW DENSITY POLYETHYLENE

Manufacturer correspondence*	
RENAULT	7703074048

* Non contractual information given as indication