1 Allée des Bouleaux -F-95110 SANNOIS
+33 (0)1 39 98 55 00
info@restagraf.com

SCHEIBE FLACH Ø 7 X 20 X 1,5 mm

Item code	Number of References	Number of pieces	Conditioning
40304	1	150	BEHÄLTER
515	1	55	BEUTEL

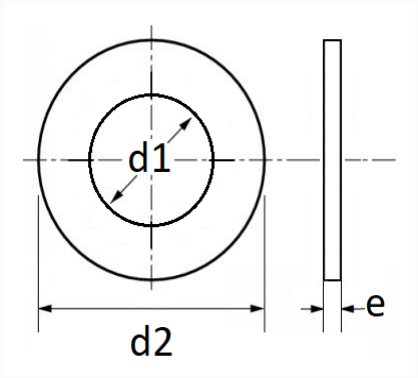

Technical informations	
d1	7.4 mm
d2	20 mm
e	1.5 mm

Materials
STAHL

Manufacturer correspondence*			
PEUGEOT / CITROËN	694725	RENAULT	7703053658

* Non contractual information given as indication