1 Allée des Bouleaux -F-95110 SANNOIS
+33 (0)1 39 98 55 00
info@restagraf.com

GRADE 8.8 ZINC PLATED HEXAGON HEAD MACHINE SCREW M12-1.75 X 140 mm DIN 931 PARTIAL THREAD

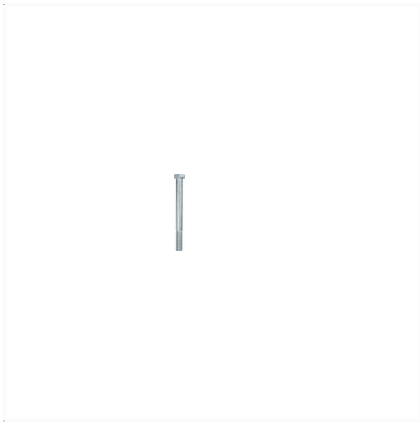

Item code	Number of References	Number of pieces	Conditioning
40142	1	10	TRUCK BOX

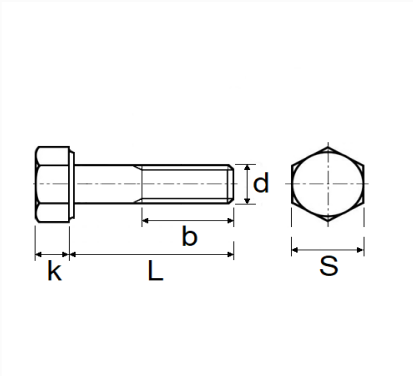

Technical informations	
s	19 mm
k	7.5 mm
b	36 mm
L	140 mm
d	M12 x 1.75

Materials
CLASS 8.8 STEEL