1 Allée des Bouleaux -F-95110 SANNOIS
+33 (0)1 39 98 55 00
info@restagraf.com

GRADE 8.8 ZINC PLATED HEXAGON HEAD MACHINE SCREW M5-0.80 X 16 mm DIN 933

Item code	Number of References	Number of pieces	Conditioning
40104	1	100	TRUCK BOX
801	1	50	BAG

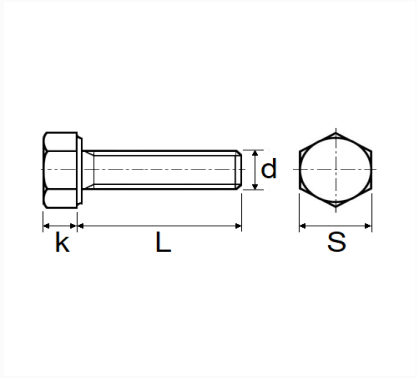

Technical informations	
s	8 mm
k	3.5 mm
L	16 mm
d	M5 x 0.80

Materials
CLASS 8.8 STEEL

Manufacturer correspondence*			
PEUGEOT / CITROËN	691826	RENAULT	7703001369

* Non contractual information given as indication