1 Allée des Bouleaux -F-95110 SANNOIS
+33 (0)1 39 98 55 00
info@restagraf.com

LEISTENKLEMME Ø 8 mm GÜRTELLINIE

Item code	Number of References	Number of pieces	Conditioning
12936	1	10	BEUTEL

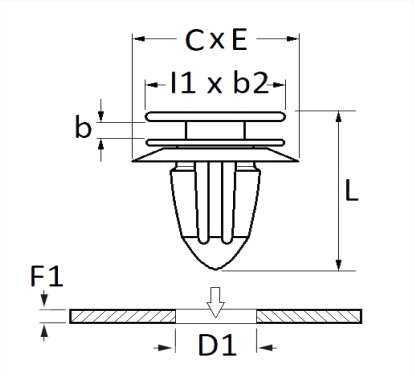

Technical informations	
I1	12 mm
b2	10.6 mm
b	1.5 mm
L	17 mm
C	20 mm
E	14.5 mm
D1	8 mm
F1	0.65 → 0.8 mm

Materials
POLYAMID UND ELASTOMER

Manufacturer correspondence*	
FIAT	13051391

* Non contractual information given as indication