1 Allée des Bouleaux -F-95110 SANNOIS
+33 (0)1 39 98 55 00
info@restagraf.com

PANEL CLIP Ø 8,2 mm DOOR AND INTERIOR TRIM

Item code	Number of References	Number of pieces	Conditioning
12672	1	8	BAG

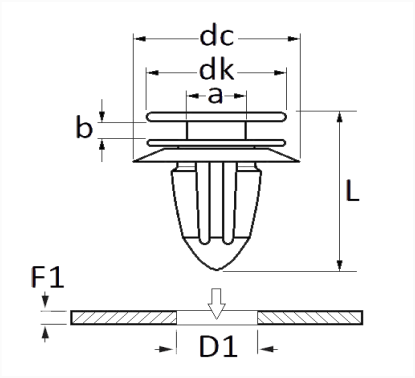

Technical informations	
dk	14 mm
dc	18.5 mm
b	2.2 mm
a	5.75 mm
L	18.2 mm
D1	8.2 mm
F1	1 mm

Materials
POLYACETAL COPOLYMER

Manufacturer correspondence*	
MERCEDES-BENZ	A0009912771

* Non contractual information given as indication