1 Allée des Bouleaux -F-95110 SANNOIS
+33 (0)1 39 98 55 00
info@restagraf.com

PLASTIC RIVET Ø 6,5 → 7,5 mm

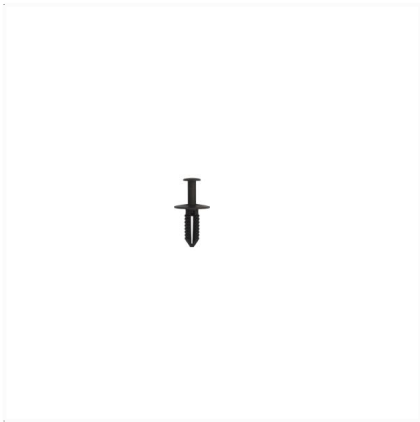

Item code	Number of References	Number of pieces	Conditioning
12671	1	10	BAG
42667	1	100	BOX
228176	1	4	BLISTER

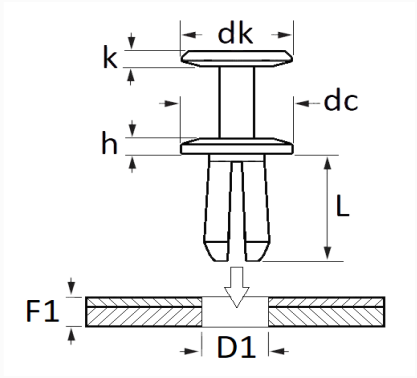

Technical informations	
dk	8 mm
k	1.3 mm
dc	16 mm
h	1.6 mm
L	18 mm
D1	6.5 → 7.5 mm
F1	3 → 12 mm

Materials
POLYAMIDE 66

Manufacturer correspondence*	
MERCEDES-BENZ	A1249900492

* Non contractual information given as indication