1 Allée des Bouleaux -F-95110 SANNOIS
+33 (0)1 39 98 55 00
info@restagraf.com

PLASTIC RIVET Ø 8 mm BONNET SOUNDPROOFING

Item code	Number of References	Number of pieces	Conditioning
12658	1	8	BAG

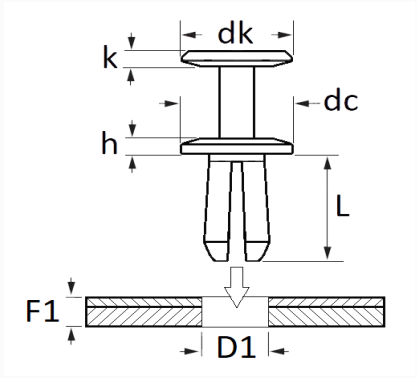

Technical informations	
dk	15 mm
k	1.3 mm
dc	20 mm
h	2.4 mm
L	9.1 mm
D1	8 mm
F1	2 → 5 mm

Materials
POLYAMIDE 66

Manufacturer correspondence*			
MERCEDES-BENZ	A0009907892	SUBSTITUTABLE FOR AUDI	4D0807300B

* Non contractual information given as indication