Restagraf
1 Allée des Bouleaux -F-95110 SANNOIS
+33 (0)1 39 98 55 00
info@restagraf.com

PLASTIC RIVET Ø 8 mm BONNET SOUNDPROOFING



Item code	Number of References	Number of pieces	Conditioning
12650	1	8	BAG

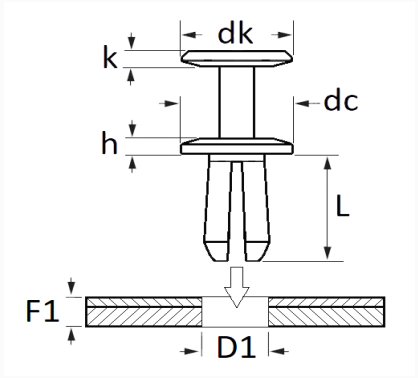

Technical informations	
dk	7 mm
k	1.2 mm
dc	18 mm
h	2.5 mm
L	5 mm
D1	8 mm
F1	3.5 mm

Materials
POLYACETAL HOMOPOLYMER

Manufacturer correspondence*			
FORD Engineering number	W711461S300	MERCEDES-BENZ	A1249900892

Manufacturer correspondence*	
VOLKSWAGEN	N90927501

* Non contractual information given as indication