Restagraf
1 Allée des Bouleaux -F-95110 SANNOIS
+33 (0)1 39 98 55 00
info@restagraf.com

PANEELBEVESTIGINGSKLEM Ø 8 mm



Item code	Number of References	Number of pieces	Conditioning
12632	1	10	

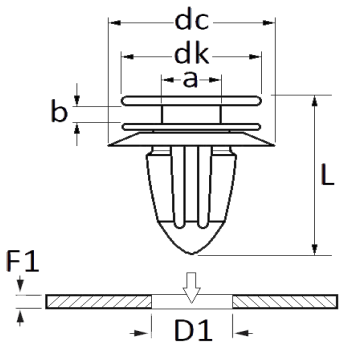

Technical informations	
dk	13.2 mm
dc	18 mm
b	2.3 mm
a	4.2 mm
L	24.9 mm
D1	8 mm
F1	0.7 → 1.5 mm

Materials
POLYAMIDE

Manufacturer correspondence*	
ALFA ROMEO	50571821

* Non contractual information given as indication