1 Allée des Bouleaux -F-95110 SANNOIS
+33 (0)1 39 98 55 00
info@restagraf.com

WING NUT M5-0.80 DIN 315

Item code	Number of References	Number of pieces	Conditioning
759	1	20	BAG

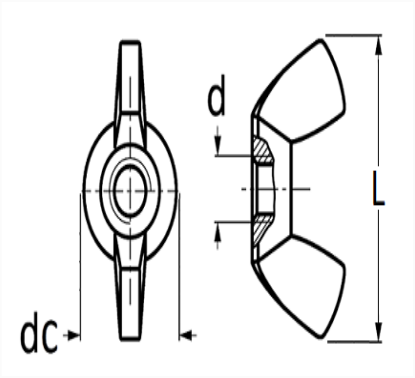

Technical informations	
dc	9.6 mm
d	M5 x 0.80
L	22 mm

Materials
STEEL