1 Allée des Bouleaux -F-95110 SANNOIS
+33 (0)1 39 98 55 00
info@restagraf.com

DOOR HINGE AXIS

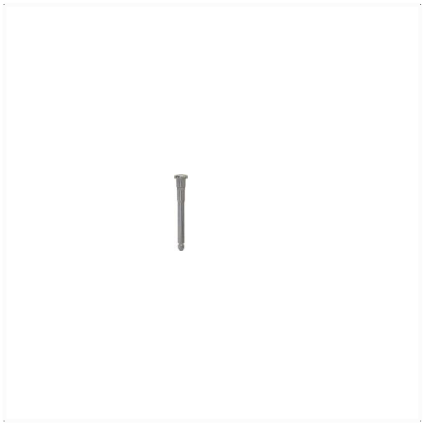

Item code	Number of References	Number of pieces	Conditioning
10681	1	2	BAG

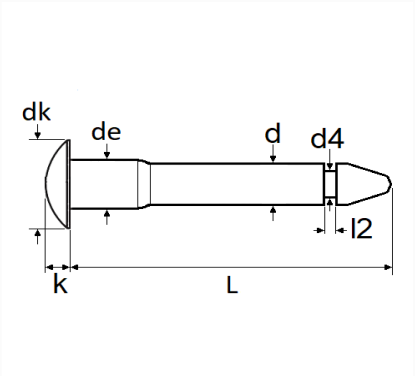

Technical informations	
dk	14 mm
k	5 mm
L	81 mm
de	8 mm
d	7 mm
d4	4.8 mm
l2	1.8 mm

Materials
STEEL

Manufacturer correspondence*			
PEUGEOT / CITROËN	904445	PEUGEOT / CITROËN	904457

* Non contractual information given as indication