1 Allée des Bouleaux -F-95110 SANNOIS
+33 (0)1 39 98 55 00
info@restagraf.com

PLASTIC RIVET Ø 8,5 mm ENGINE UNDERCOVER MUDGUARD

Item code	Number of References	Number of pieces	Conditioning
12439	1	6	BAG

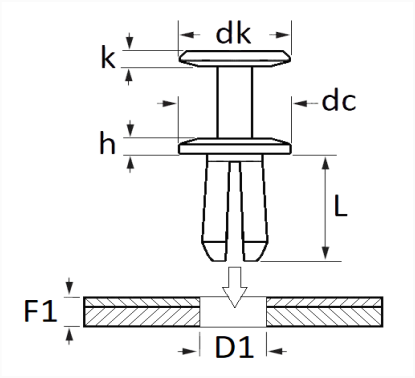

Technical informations	
dk	10.5 mm
k	1.2 mm
dc	25 mm
h	2.6 mm
L	13.5 mm
D1	8.5 mm
F1	5 → 8.5 mm

Materials
POLYACETAL COPOLYMER

Manufacturer correspondence*			
AUDI	8Z0825267	MERCEDES-BENZ	A1639900292

Manufacturer correspondence*	
VOLKSWAGEN	8Z0825267

* Non contractual information given as indication