1 Allée des Bouleaux -F-95110 SANNOIS
+33 (0)1 39 98 55 00
info@restagraf.com

PANEL CLIP Ø 8,2 mm DOOR AND INTERIOR TRIM

Item code	Number of References	Number of pieces	Conditioning
12438	1	8	BAG

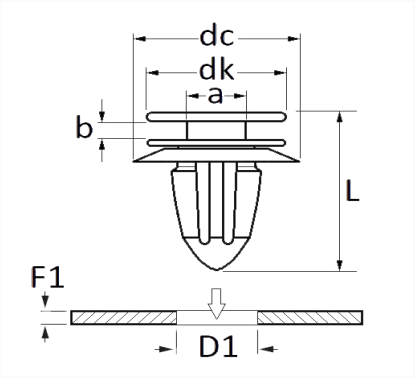

Technical informations	
dk	13.2 mm
dc	18 mm
b	2.3 mm
a	5.5 mm
L	17.8 mm
D1	8.2 mm
F1	0.8 mm

Materials
POLYACETAL COPOLYMER

Manufacturer correspondence*			
MERCEDES-BENZ	A0119887678	VOLKSWAGEN	2E1827649

* Non contractual information given as indication