1 Allée des Bouleaux -F-95110 SANNOIS
+33 (0)1 39 98 55 00
info@restagraf.com

DOOR HINGE AXIS

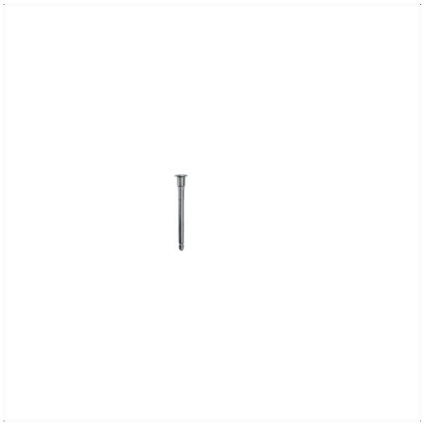

Item code	Number of References	Number of pieces	Conditioning
12421	1	2	BAG

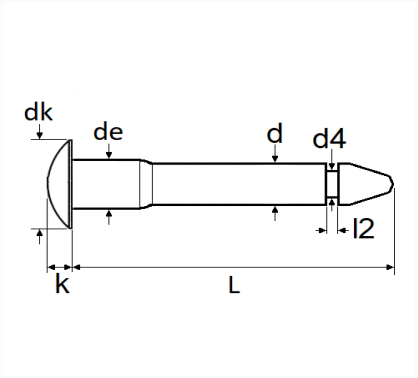

Technical informations	
dk	13.8 mm
k	2 mm
L	80 mm
de	6.4 mm
d	6 mm
d4	4.5 mm
l2	1.9 mm

Materials

Manufacturer correspondence*	
PEUGEOT / CITROËN	904449

* Non contractual information given as indication