1 Allée des Bouleaux -F-95110 SANNOIS
+33 (0)1 39 98 55 00
info@restagraf.com

PLASTIC RIVET Ø 7 mm WHEEL HOUSING COVER

Item code	Number of References	Number of pieces	Conditioning
12382	1	10	BAG
42708	1	100	BOX

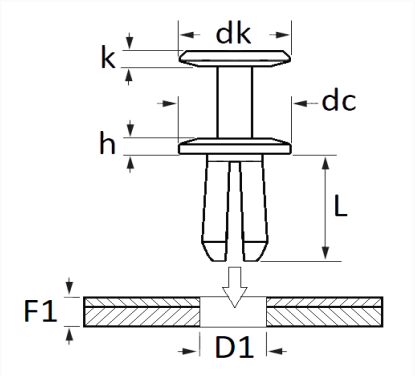

Technical informations	
dk	14 mm
k	1.6 mm
dc	20 mm
h	2 mm
L	8 mm
D1	7 mm
F1	0.7 → 3 mm

Materials
POLYAMIDE 6

Manufacturer correspondence*	
TOYOTA	9046707166

* Non contractual information given as indication