1 Allée des Bouleaux -F-95110 SANNOIS
+33 (0)1 39 98 55 00
info@restagraf.com

SOFT MATERIAL SCREW Ø 4,5 X 27 mm WHEEL HOUSING COVER

Item code	Number of References	Number of pieces	Conditioning
12363	1	12	BAG
228250	1	4	BLISTER

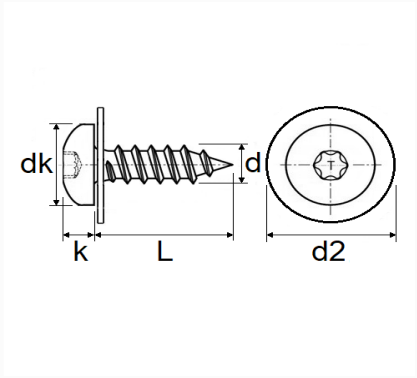

Technical informations	
dk	9.5 mm
k	3.1 mm
L	27 mm
d	4.5 mm
d2	18 mm
T	X20

Manufacturer correspondence*	
PEUGEOT / CITROËN	856566

* Non contractual information given as indication