1 Allée des Bouleaux -F-95110 SANNOIS
+33 (0)1 39 98 55 00
info@restagraf.com

# PANEL CLIP Ø 8,2 mm INTERIOR AND EXTERIOR TRIM

| Item code | Number of References | Number of pieces | Conditioning |
|---|---|---|---|
| 12291 | 1 | 6 | BAG |

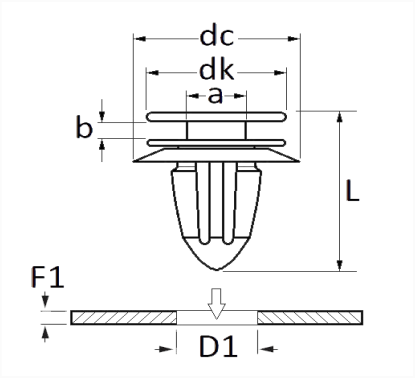


| Technical informations | |
|---|---|
| dk | 13.2 mm |
| dc | 18 mm |
| b | 2.3 mm |
| a | 5.5 mm |
| L | 13.2 mm |
| D1 | 8.2 mm |
| F1 | 0.8 → 1 mm |
| | |
| | |
| | |

| Materials |
|---|
| POLYACETAL COPOLYMER |

| Manufacturer correspondence* | | | |
|---|---|---|---|
| MERCEDES-BENZ | A0089887378 | SKODA | 5J0853139 |
| | | | |

| Manufacturer correspondence* | |
|---|---|
| VOLKSWAGEN | 7H0843213 |

* Non contractual information given as indication