1 Allée des Bouleaux -F-95110 SANNOIS
+33 (0)1 39 98 55 00
info@restagraf.com

MOULDING CLIP Ø 8,5 mm BODY SHELL BELTLINE

Item code	Number of References	Number of pieces	Conditioning
12030	1	8	BAG
42723	1	100	BOX

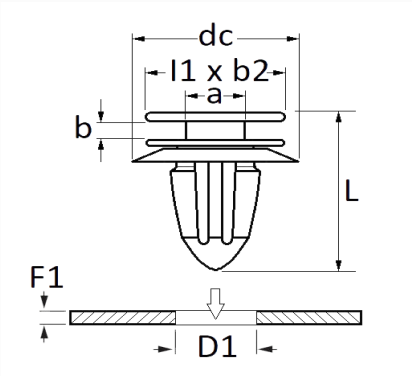

Technical informations	
l1	10 mm
b2	8 mm
dc	21 mm
b	1.15 mm
a	2.95 mm
L	15.75 mm
D1	8.5 mm
F1	0.8 → 1 mm

Materials
POLYACETAL & ELASTOMER

Manufacturer correspondence*			
PEUGEOT / CITROËN	856556	SUBSTITUTABLE FOR CITROËN	856556

Manufacturer correspondence*	
SUBSTITUTABLE FOR PEUGEOT	856568

* Non contractual information given as indication