1 Allée des Bouleaux -F-95110 SANNOIS
+33 (0)1 39 98 55 00
info@restagraf.com

PANEL CLIP COWL AIR INTAKE GRID

Item code	Number of References	Number of pieces	Conditioning
12029	1	4	BAG

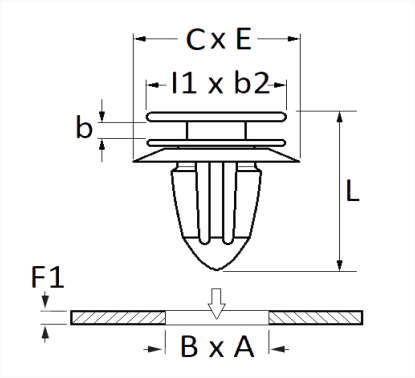

Technical informations	
l1	11 mm
b2	7 mm
C	16.2 mm
E	12.2 mm
b	2 mm
L	14.4 mm
B	6.2 mm
A	10.2 mm
F1	0.77 mm

Materials
POLYACETAL COPOLYMER