1 Allée des Bouleaux -F-95110 SANNOIS
+33 (0)1 39 98 55 00
info@restagraf.com

EDGE CLIP 4 → 5 mm

Item code	Number of References	Number of pieces	Conditioning
1184	1	50	BAG

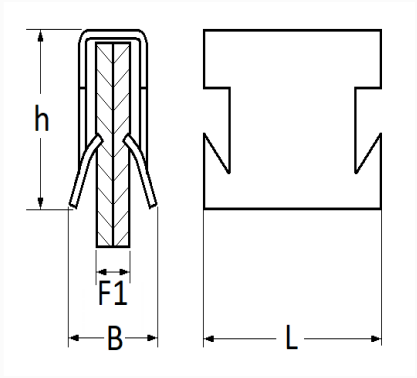

Technical informations	
L	12.7 mm
B	7.2 mm
h	8.7 mm
F1	4 → 5 mm

Materials
STEEL

Manufacturer correspondence*			
PEUGEOT / CITROËN	698672	RENAULT	7703076098

Manufacturer correspondence*	
RENAULT	7711428276

* Non contractual information given as indication