1 Allée des Bouleaux -F-95110 SANNOIS
+33 (0)1 39 98 55 00
info@restagraf.com

KUNSTSTOFFMUTTER Ø 5 mm

Item code	Number of References	Number of pieces	Conditioning
11859	1	4	BEUTEL

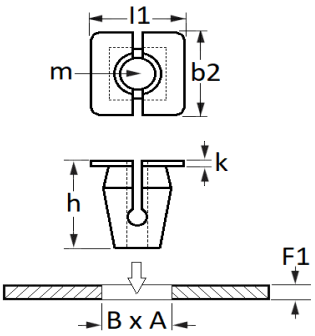

Technical informations	
l1	19 mm
b2	17 mm
k	1.8 mm
h	24.6 mm
m	Vis Matériaux Tendres Ø 5 mm
B	12.2 mm
A	14.2 mm
F1	0.5 → 3.5 mm

Materials
POLYAMID 66 ZYTEL