1 Allée des Bouleaux -F-95110 SANNOIS
+33 (0)1 39 98 55 00
info@restagraf.com

PEELED RIVET Ø 4,8 X 16 mm

Item code	Number of References	Number of pieces	Conditioning
4705	1	57	BAG
4910	1	250	BOX

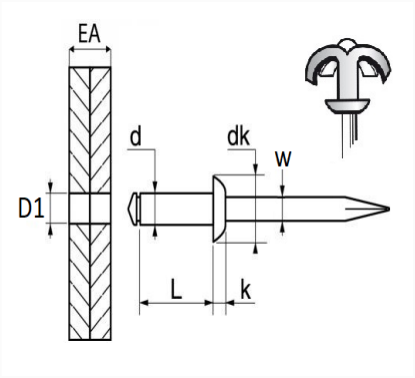

Technical informations	
d	4.8 mm
L	16 mm
dk	14 mm
k	2 mm
w	2.6 mm
EA	7 → 10 mm
D1	5 mm

Materials
ALUMINIUM ALLOY / STEEL STEM