1 Allée des Bouleaux -F-95110 SANNOIS
+33 (0)1 39 98 55 00
info@restagraf.com

MULTIGRIP STEEL RIVET Ø 6,3 X 14.5 mm BODYWORK

Item code	Number of References	Number of pieces	Conditioning
11529	1	20	BAG

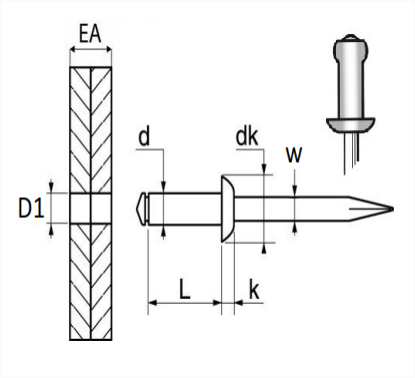

Technical informations	
d	6.3 mm
L	14.5 mm
dk	13.9 mm
k	2.6 mm
w	3.94 mm
EA	1.5 → 7.6 mm
D1	6.35 → 6.60 mm

Materials
STEEL

Manufacturer correspondence*	
PEUGEOT / CITROËN	7840T1

* Non contractual information given as indication