1 Allée des Bouleaux -F-95110 SANNOIS
+33 (0)1 39 98 55 00
info@restagraf.com

MOULDING CLIP Ø 8 mm BODY SHELL BELTLINE

Item code	Number of References	Number of pieces	Conditioning
10757	1	16	BAG
42620	1	100	BOX
228053	1	5	BLISTER

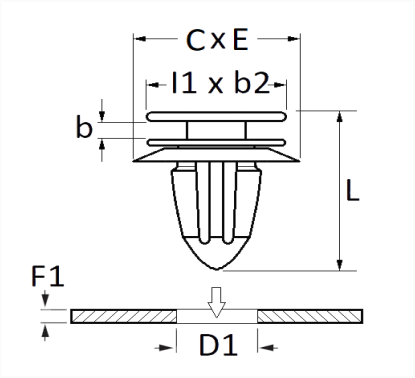

Technical informations	
l1	12 mm
b2	10.7 mm
b	1.5 mm
L	17 mm
C	20 mm
E	14.5 mm
D1	8 mm
F1	0.7 → 1 mm

Materials
POLYACETAL & ELASTOMER

Manufacturer correspondence*			
FIAT	71728806	FIAT	71728887

Manufacturer correspondence*	
PEUGEOT / CITROËN	856543

* Non contractual information given as indication