1 Allée des Bouleaux -F-95110 SANNOIS
+33 (0)1 39 98 55 00
info@restagraf.com

SOFT MATERIAL SCREW Ø 6 X 28 mm BODYWORK

Item code	Number of References	Number of pieces	Conditioning
11460	1	12	BAG

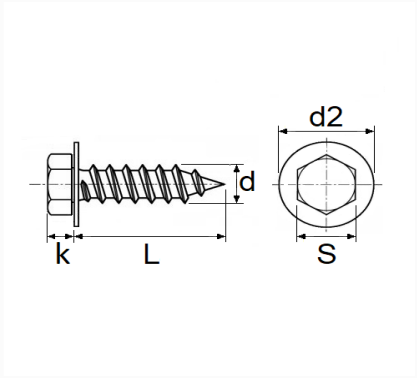

Technical informations	
s	10 mm
k	5.1 mm
d2	17.2 mm
L	28 mm
d	6 mm

Manufacturer correspondence*	
RENAULT	7703017096

* Non contractual information given as indication