1 Allée des Bouleaux -F-95110 SANNOIS
+33 (0)1 39 98 55 00
info@restagraf.com

ADHESIVE SHIM 7 x 10 WINDSCREEN

Item code	Number of References	Number of pieces	Conditioning
11334	1	12	BAG

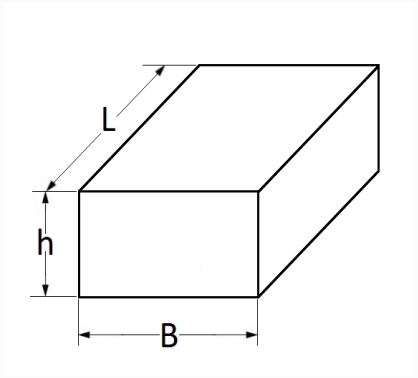

Technical informations	
L	10 mm
B	10 mm
h	7 mm

Materials
RUBBER

Manufacturer correspondence*			
ALTERNATIVE TO RENAULT	8200410679	RENAULT	8200158100

*Non contractual information given as indication