1 Allée des Bouleaux -F-95110 SANNOIS
+33 (0)1 39 98 55 00
info@restagraf.com

LARGE HEAD ALUMINIUM ALLOY RIVET Ø 4,8 X 17 mm LOUD SPEAKER

Item code	Number of References	Number of pieces	Conditioning
11142	1	20	BAG
228459	1	4	BLISTER

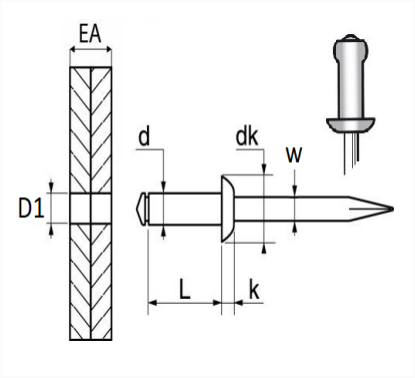

Technical informations	
d	4.8 mm
L	17 mm
dk	16 mm
k	2.2 mm
w	2.9 mm
EA	6.4 → 12.7 mm
D1	5 mm

Materials
ALUMINIUM ALLOY / STEEL STEM

Manufacturer correspondence*	
PEUGEOT / CITROËN	6974A5

* Non contractual information given as indication