1 Allée des Bouleaux -F-95110 SANNOIS
+33 (0)1 39 98 55 00
info@restagraf.com

# MOULDING CLIP Ø 9 mm DOOR AND ROCKER PANEL

| Item code | Number of References | Number of pieces | Conditioning |
|---|---|---|---|
| 12574 | 1 | 10 | BAG |

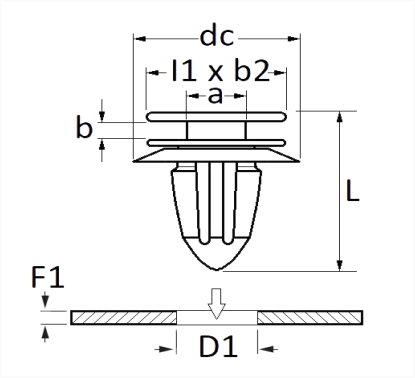


| Technical informations | |
|---|---|
| l1 | 9 mm |
| b2 | 6 mm |
| dc | 13 mm |
| b | 1.5 mm |
| a | 2.9 mm |
| L | 11.5 mm |
| D1 | 9 mm |
| F1 | 0.8 → 1.2 mm |
| | |
| | |

| Materials |
|---|
| POLYACETAL COPOLYMER |

| Manufacturer correspondence* | |
|---|---|
| NISSAN | 76882EW00B |

* Non contractual information given as indication