1 Allée des Bouleaux -F-95110 SANNOIS
+33 (0)1 39 98 55 00
info@restagraf.com

PLASTIC WASHER Ø 6,6 X 25 X 1,2 mm ENGINE UNDERCOVER MUDGUARD

Item code	Number of References	Number of pieces	Conditioning
11072	1	16	BAG

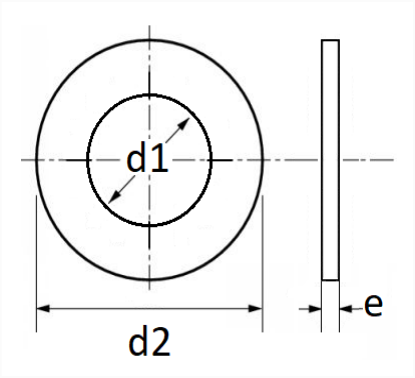

Technical informations	
d1	6.6 mm
d2	25 mm
e	1.2 mm

Materials
POLYETHYLENE

Manufacturer correspondence*			
AUDI	4A0805137A	RENAULT SAMSUNG MOTORS	433125

Manufacturer correspondence*			
SEAT	4A0805137A	SKODA	4A0805137A
VOLKSWAGEN	4A0805137A		

* Non contractual information given as indication